CITY OF NOVATO
CALIFORNIA

Best Practices for Drafting Plans

One of the leading reasons why plans are returned for corrections during the Building Department plan review process is poor quality drafting. Plans must be drawn to scale on 17” x 11” min. (36” x 24” preferred) sized paper sheets and must be drawn using architectural graphic symbols, line weights, labeling, referencing, notations, schedules, dimensioning, detailing and technique to help the plan reader quickly and efficiently understand the exact nature and scope of the proposed work. Plans must be accurate, crisply drawn (use straight edge), well organized and fully coordinated between the plan sheets and must provide sufficient information to describe the work. Text and plan notations must be not less than 9-point Arial font or equal or 1/8” neatly hand printed and easily readable in landscape orientation.

Conversely, plans that have extraneous markings, poor line weight, hard to read text, missing or inaccurate information, not coordinated, or plans that are messy, not to scale, or don’t utilize appropriate drafting techniques or standardized symbols are almost always rejected and returned for corrections. This adds time and frustration during the building permit plan review process which is not beneficial to anyone.

The following is a basic checklist of items that should be considered when preparing plans:

- **Sheet Size and Orientation**
  - Typically, residential plans should be drawn on 36”x 24” sized sheets (Arch D). All plan sheets should be the same size, be sequentially numbered and be oriented to read in landscape orientation. The minimum size plan sheet is typically 17” x 11” (ANSI B).

- **Drafting Tools you will need**
  - Computer aided drafting (CAD) program (if drafting with a computer);

    <u>or</u>
  - Architectural Drafting Scale (Engineering Scale is also recommended).
  - Either a parallel rule or a T-square, a 45 and 60 degree triangle.
  - Fixture and basic shape Templates.

- **Drawing Scale** - Typical scales for drawings are as follows:
  - Site Plan, Grading Plan, and Roof Plan: 1” = 20’-0” or 1/8” = 1’-0”
  - Foundation Plan, Floor Plan, Electrical, Plumbing and Mechanical Plans, Framing Plans and Elevations: 1/4” = 1’-0”
  - Building Sections: 3/8”- 1/2” = 1’-0”
  - Construction and Structural Details: 3/4”- 3” = 1’-0”

- **Graphic Symbols** – Architectural graphic symbols should be used when drafting floor plans. A sample of some typical residential plan symbols are provided on the last two pages of this handout.

- **Line Weight** - Line weight is important to properly convey the information on the drawings. All lines should be crisp true and easily readable.

- Lines depicting primary objects of construction such as walls, structural framing members, details and elevation outlines should be **bold line weight**.
- Lines depicting secondary objects such as doors, windows, counters, and cabinets should be drawn with a **medium line weight**.
- Lines depicting supplemental information such as dimension lines, center lines and callout lines should be drawn with **light weight lines**.

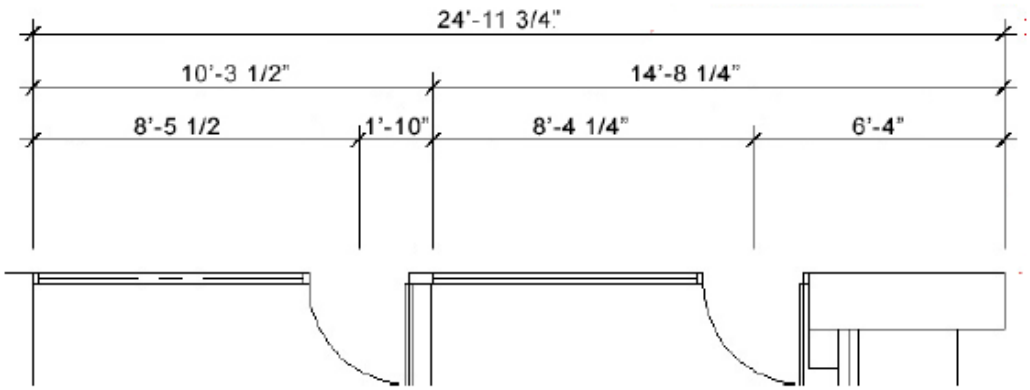

- **Labeling, Lettering, Notations and Referencing**
  - Each plan, section, detail or elevation should be uniquely labeled and numbered.
  - The size of the text or font must not be less than 1/8" height for hand lettering and 3/32" height for computer generated text.

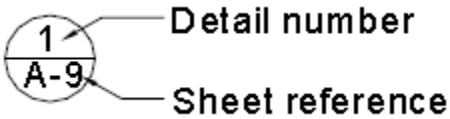

  - Notes and callouts describing the work or drawn components must be provided.
  - For alteration projects, elements shown should be labeled new (N) or existing (E).
  - All new doors and windows should be identified with size and type information or a unique symbol referencing the door or window in the door or window schedule.
  - Cross-References to specific details should be provided.

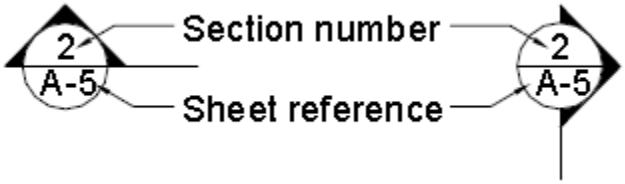

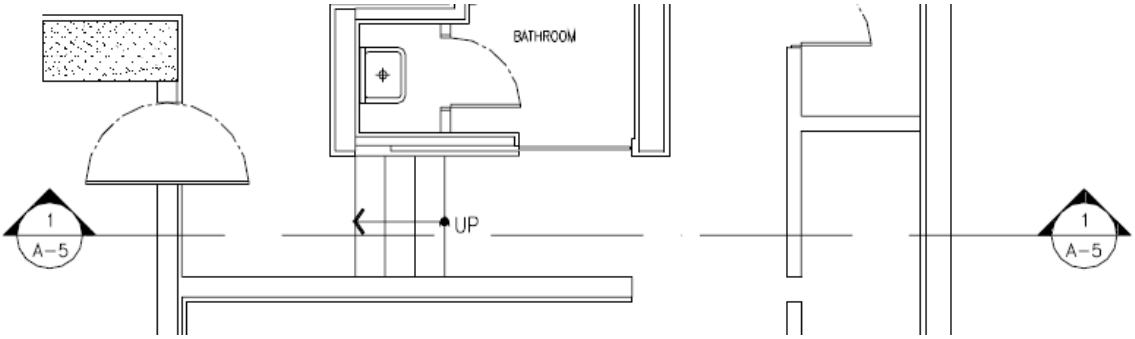

Residential Plan Symbol Legend

(E) Existing ceiling light fixture

HE High Efficacy ceiling light fixture

Incandescent wall light fixture

HE High Efficacy wall light fixture

HE WR High Efficacy & Water Resistant wall light fixture

Fluorescent ceiling light fixture

Undercabinet fluorescent light fixture

R (E) Existing recessed ceiling light fixture

R HE High Efficacy recessed ceiling light fixture

R HE WR High Efficacy - Water Resistant recessed fixture

S 120v smoke detector w/ battery backup

C 120v carbon monoxide (CO) alarm w/ bat. backup

S/C 120v smoke & CO alarm w/ battery backup

Ceiling fan/light combination

P Photocell

M Motion sensor

Duplex receptacle (AFCI protected)

GFI Duplex receptacle (GFCI protected)

WP GFI Duplex receptacle (waterproof & GFCI protected)

GFI - 51" Duplex GFCI protected receptacle - specified ht.

Duplex receptacle (AFCI protected)

DW Special purpose receptacle (dishwasher)

240v 240v receptacle

J Wall junction box

Floor mount receptacle (AFCI protected)

Single pole switch

2 2 pole switch

3 3-way switch

4 4-way switch

D Single pole dimmer switch

3 D 3-way dimmer switch

V Vacancy sensor switch

Concealed switch conductors

ATC Astronomical Time Clock

MAIN 200A Main service panel (amperage)

100A Sub panel (amperage)

TV Data, Phone & TV jack

Phone, Data jack

Data jack

TV CATV jack

Data and electrical outlet

C Security camera

BT Doorbell transformer

CH Doorbell chime

Doorbell pushbutton

T Thermostat

Exhaust fan

H Exhaust fan w/ Humidistat control

HVAC supply air register

Under cabinet HVAC register

Return air grill

G Gas outlet

HB Hose bibb w/ anti siphon

Ice Ice supply valve

W H Instant hot water heater

Low flow shower head

For alteration projects add subscripts:

(N) for New

(E) for Existing

Residential Plan Symbol Legend

New wall

Existing wall

Existing wall to be removed

4 x 12" #1 D.F. — New beam (size and material)

1 — Window (window schedule reference)

A — Swinging door (door schedule reference)

3/0 — Pocket door (door width)

5/0 — Bypass door (door width)

5/0 — Byfold door (door width)

5/0 — Sliding glass door (door width)

1 / A1 — Detail Number; Detail Reference; Page Number

1 / A1 — Referenced Section Number; Section Reference; Referenced Page Number

1 / A1 — Elevation Reference Number; Elevation Reference; Referenced Page Number

1 — Window schedule reference

A — Door schedule reference

1 — Drawing revision number

For alteration projects add subscripts:

(N) for New

(E) for Existing

REFR. — Refrigerator

DW — Dishwasher

Range/Cooktop w/ Hood

Oven — Oven

Comp — Compactor

W — Washer

D — Dryer

1.2 GPM — Sink / Lavatory (GPM)

Tub

1.8 GPM — Shower (GPM)

1.28 GPF — Water Closet (GPF)

WH 50 gal — Storage type Water Heater (Gal)

WH (188,000) — Tankless water heater (BTU/H)

F (66,000) — Forced-Air Furnace (BTU/H)

Air-Conditioner Condenser Unit